INTRODUCTION

HISTORY TIMELINE

2006

BEGIN

(TRICUONG INDUSTRIAL CO.,LTD)

2011 - 2012

Expansion of factory production scale in Lai Xa Industrial Cluster, Hoai Duc, Hanoi

2015 - 2016

Building a new factory at Nguyen Khe Auto Industry Cluster, Dong Anh, Hanoi

2019

TCI Automation Joint Stock Company (TCI AUTOMATION., JSC) was established in Thu Duc City, Ho Chi Minh City

2020

TCI Precision Joint Stock Company (TCI PRECISION., JSC) was established in Hoa Phu Industrial Park, Bac Giang

AND MORE

EFFORT - RESPONSIBILITY - SUCCESS



TCI INDUSTRIES JOINT STOCK COMPANY

ESTABLISHED IN 2006.

Address: Km16+800, Highway3, Nguyen Khe Automotive Industrial Zone, Nguyen Khe commune, Dong Anh District, Ha Noi City.

The number of personnel: 200

Main Products: Customized Machines & Automation Systems Jigs & Machining Parts for domestic and export

TCI PRECISION JOINT STOCK COMPANY

ESTABLISHED IN 2020.

Address: Lot CN-10, Hoa Phu Industrial Park, Xuan Cam Commune, Bac Ninh Province, Viet Nam.

The number of personnel: 200

Main Products: Machining Parts & Assembly of mechanical components

Capacity: 500,000 pcs/Month

TCI AUTOMATION JOINT STOCK COMPANY

ESTABLISHED IN 2019.

Address: No. 2, Lot C2, Phu Nhuan Residential Area, Phuoc Long B Ward, Thu Duc City, Ho Chi Minh City

The number of personnel: 30

Main Products: Customized Machines & Automation Systems

1- Who are we? 私たちは誰ですか

- TCI Precision.,JSC was formerly a production department of TCI Industries Joint stock company in 2016. In April 2020,TCI Precision Joint Stock Company was established to develop and engage much more in the supply chain of Vietnam.
- Our main products include joints, fittings, block valves, shafts, and precision parts.
- We achieve a monthly production output of up to 300,000 products with 200 employees.
- Our quality management system is ISO 9001:2015 certified..

- *- TCIPは2020年4月に700万ドルの資本金で設立されました。*
- *-当社の主要製品にはジョイント、フィッティング、ブロックバルブ、シャフト、および精密部品が含まれます。*
- *-当社は月産30万製品を200人の従業員で達成しています。*

当社の品質管理システムはISO 9001:2015に認証されています。









TCI PRECISION.,JSC MAP

Hoa Phu Industrial Park, Xuan Cam, Bac Ninh.



Noi Bai Airport 24 Km

YEN PHONG INDUSTRIAL ZONE 7 Km

TCI 25 Km

THANG LONG INDUSTRIAL ZONE 35 Km

VSIP INDUSTRIAL ZONE 24 Km

HAI PHONG PORT 120Km

HA NOI CENTER 37 Km

THÁP RÙA - HỒ GƯƠM

4. Production process
生産プロセス

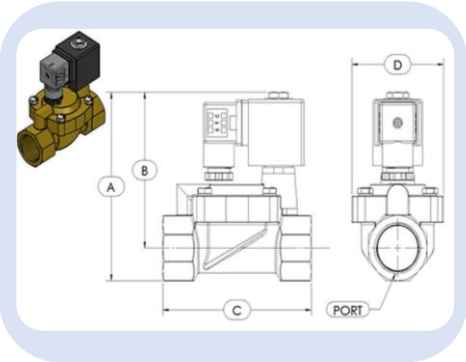

1. DRAWINGS



2. RAW/FORGING/ CASTING



3. MACHININGS (TURNING/ MILLING/ GRINING)



4. SURFACE PROCESSING



5. ASSEMBLY



6. TESTING



7. CHECKING



8. PACKING

5.What are our main products?主な製品

FITTINGS, etc

Material: *SUS303/ SUS304/ SUS316L/ SUS410….*

Application: Our main products are valve components, fittings, and conduits for high-pressure and high-reliability gas and liquid conveying systems. Main materials used: SUS303, SUS304, SUS316, SUS410,...



Union elbow

Material: SUS303/SUS304/ SUS316/ ...
Machine: Lathe
Spec: ±0,03
Using: Pipeline system for transporting liquids or gases.

Straight joint



Material: SUS303/SUS304 / SUS316/ ...
Machine: Lathe
Spec: ±0,03
Using: Pipeline system for transporting liquids or gases.

Female/Male Connector





Material: SUS303/SUS304 / SUS316...
Machine: Lathe
Spec: ±0,03

Using: Pipeline system for transporting liquids or gases.



Hollow cone nozzles

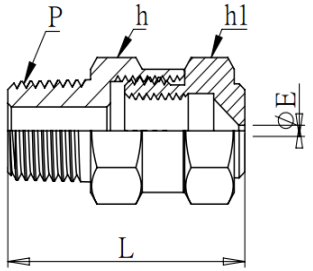

Material: SUS303/SUS304 / SUS316/ ...
Spec: ±0,03

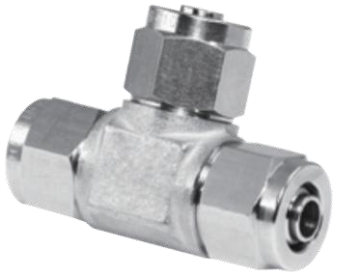

Material: SUS303/SUS304 / SUS316/ ...
Machine: Lathe
Spec: ±0,03
Using: Pipeline system for transporting liquids or gases.

Union T

Joint, fitting

Material: SUS303/SUS304 / SUS316/ ...
Machine: Lathe
Spec: ±0,03



Plug



Mini PU Plug



Hose Plug



Male Plug

Material: SUS303/SUS304 / SUS316/ ...
Spec: ±0,03

Union T

Material: SUS303/SUS304/ SUS316/ ...
Machine: Lathe
Spec: ±0,03
Using: Pipeline system for transporting liquids or gases.



5.What are our main products?主な製品

VALVES & COMPONENTS

Material: *SUS303/ SUS304/ SUS316L/ SUS410....*





Application: *Control systems for fluid and compressed air in industrial sectors or households*

Q'ty: *500 pcs – 10,000 pcs/lot & repeat*

Block four door



Block Valve





Base of Valve



Block Valve

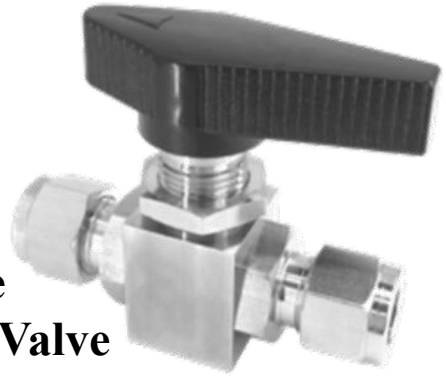

Tube Ball Valve



Tube Valve



Female Needle Valve



Other Valve

5.What are our main products?主な製品

SHAFT

Material: *S45C/ SCM415/ SCM440....*





Application: *Used in gearboxes, motors, and the pin-locking system of forklifts.*
Q'ty: *100 pcs – 1,000 pcs/lot & repeat*

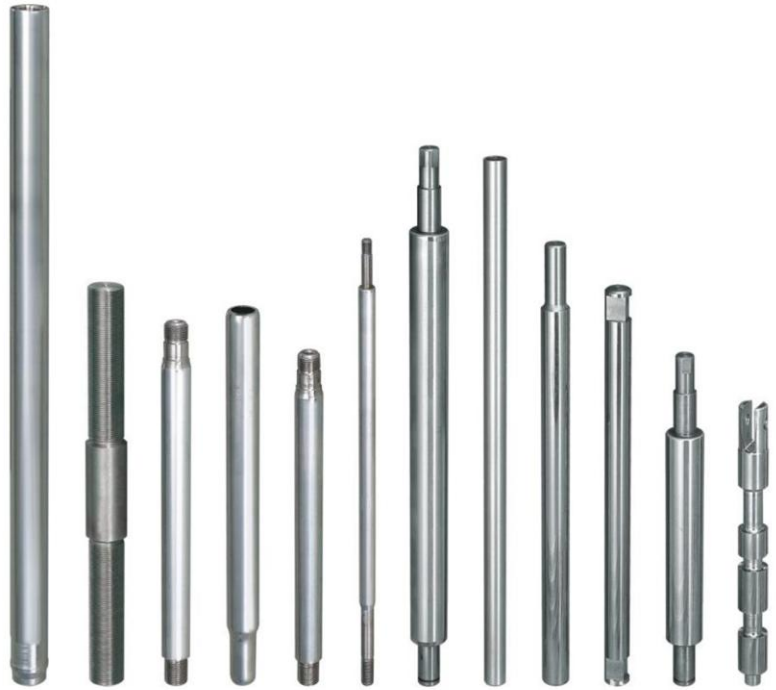



Pin, Turned Parts



Shaft for Motors



Axles swing



King Pin, Sleeve

5.What are our main products?主な製品

OTHER

Application: Precision components, parts within the machinery systems of the electrical, electronic, and semiconductor industry

Material: SUS303, SUS304, SUS316, S45C, SCM415, SCM440, etc



Lathe Part

Material: SUS304
Machine: Lathe
Spec: ±0,03
Q'ty: 150 pcs/lot.

Nut/ Guide Part

Material: S45C, SCM415
Machine: Lathe,
Milling
Spec: ±0,05
Using: Cylinder big size,
Molding
Surface: Black oxide coating







Base part

Material: SUS304
Machine: Milling
Spec: ±0,03
Q'ty: 100 pcs/lot

Joint for coupler

Material: SUS304
Machine: Turning & Milling
Spec: ±0,05
Q'ty: 2000 pcs/lot





Plate

Material: SUS304
Machine: Lathe
Spec: ±0,03
Q'ty: 500 pcs/lot

Roller parts

Material: SUS304,SCM415, SCM420...
Machine: Turning
Spec: ±0,03
Q'ty: 500 pcs/lot.





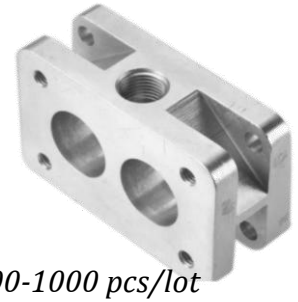

Milling 4-5 axis, Q'ty: 500-1000 pcs/lot

Material: A5052

Spec: ±0,03

Bushing

Material: SUS304
Machine: Lathe
Spec: ±0,03
Using: Parts of the machine in the electronics industry



6.Who are our partner?

- **Supply for Foreign Companies in Vietnam (FDI)/ 外資系企業への提供**






- **Export experience/ 輸出経験: Japan, America, Europe, Korea,...**
- **Activities for promotion: JETRO, JICA,NC Network, VASI,..**

プロモーション活動：JETRO, JICA, NC Network, VASI,.....



OVERVIEW OUR WORKSHOP

7. MACHINERY & EQUIPMENT 機械とその他の装置

No	CNC Lathe Machine Name	Q'ty
1	Horizontal CNC Lathe Machine - Hitachi TF25/1100	03
2	Horizontal CNC Lathe Machine - Moriseki SERI	20
3	Horizontal CNC Lathe Machine - Moriseki ZL20/200	03
4	Horizontal CNC Lathe Machine - Okuma LU/LB seri	06
5	Horizontal CNC Lathe Machine - Okuma LCC15/LCS15	09
6	Horizontal CNC Lathe Machine - OkumaHowa Seri	08
7	Horizontal CNC Lathe Machine - Okuma L400II	09
8	Horizontal CNC Lathe Machine - TAKISAWA	22
9	Horizontal CNC Lathe Machine - Takamaz X10i/X20i	14
10	Horizontal CNC Lathe Machine - Kitamura/Tsugami	03
11	Horizontal CNC Lathe Machine -HWACHEON 200A	06
12	Horizontal CNC Lathe Machine - Miyano SERI	06
13	Horizontal CNC Lathe Machine - FUJI TN32	01
14	Horizontal CNC Lathe Machine - KITA VTC 30A	03
15	Horizontal CNC Lathe Machine - Nakamura Seri	02
16	CNC Vertical Machining Center - Mazak, Other	10
TOTAL		**125**





2. We have 125 Horizontal CNC Lathe machines:

- The machine has an additional axis (C-Axis)
- The machine features an automatic feeding system (Bar Feeder)
- The machine has 2 tool turret & 2 Spindles

当社は水平CNC旋盤機を120台所有しています。

- *追加軸（C軸）を備えたマシン*
- *自動供給システム（バーフィーダー）を備えたマシン*
- *2つのツールタレットと2つのスピンドルを備えたマシン*

7. MACHINERY & EQUIPMENT 機械とその他の装置

No	CNC Vertical Machining Name	Q'ty
1	CNC Vertical Machining Center - KIRA VTC 30a	01
2	CNC Vertical Machining Center - Robodrill Fanuc	04
3	CNC Vertical Machining Center - BROTHER TC-200	03
4	CNC Vertical Machining Center - Brother S700	01
5	CNC Vertical Machining Center - BROTHER	05
6	CNC Vertical Machining Center - Robodrill Fanuc	02
7	CNC Vertical Machining Center - Mycenter 2xiF	01
8	CNC Vertical MC- BROTHER TC-200/S2A&TV231	03
9	CNC Vertical Machining Center - ENSHU	01
10	CNC Vertical Machining Center - YASDA H30i	01
11	CNC Vertical Machining Center - Okuma MV40	02
12	CNC Vertical Machining Center - Kitamura	03
13	CNC Vertical Machining Center - Moriseki NV5000	01
14	CNC Vertical Machining Center - DMG NVX5080	03
15	CNC Vertical Machining Center - DMG CMX800V	01
16	CNC Vertical MC - BROTHER S500Xd1 (High Torque)	08
TOTAL		40





We have approximately 40 CNC milling machines:

- 4-5 Axis Milling Machines
- Milling machines with 2 worktables
- Milling machines with over 100 tool positions for machining complex parts.
- High Torque

当社に約30台のCNCフライス盤を所有しています。

- *4-5軸フライス盤*
- *2つのワークテーブルを備えたフライス盤*
- *複雑な部品を加工するための100以上のツールポジションを備えたフライス盤*

7. MACHINERY & EQUIPMENT 機械とその他の装置

No	Other support machinery	Q'TY
1	Surface Grinding Machine - OKK (Made in Japan)	01
2	Cylindrical Grinding Machine - TAIYO KOKI GN250 - (Made in Japan)	01
3	Band Sawing Machines - AMADA - (Made in Japan)	01
4	Circular sawing machines - AMADA - (Made in Japan)	01
5	Vertical Milling - (Made in Japan)	01
TOTAL		05

No	QA&QC Equipment	Q'TY
1	Coordinate Measuring Machine 3D - ZEISS 776 - (Made in Germany)	01
2	Optical Measuring Equipment 2.5D - Hexagon Captura - (Made in Taiwan)	02
3	Flash measuring machine - Kyence - (Made in Japan)	01
4	Surface Roughness Teasters & Digital Height Gauge - Mitutoyo - (Made in Japan)	02
5	Other machine	01
TOTAL		07





- OKK flat grinding and cylindrical grinding machines effectively meet customer requirements for product finishing.
- AMADA CNC cutting machines with a cutting tolerance of ±0.2mm reduce machining costs and lead times.
- 製品の仕上げに関するお客様の要件を効果的に満たしているOKKの平面研削機と円筒研削機
- ±0.2mmの切削許容差を持ち、加工コストとリードタイムを削減できるAMADAのCNC切削機







- The Zeiss CMM measurement machine is manufactured in Germany and contains boasts high precision with an accuracy of up to 1.5µm.
- The 2.5D Project measurement machine can measure almost components in non-contact way without distorting the product.
- *1.5µmまでの高精度を持っているドイツ製のZeissCMM測定機*
- *製品を歪ませることなく、ほとんどのコンポーネントを非接触で測定できる2.5Dプロジェクト測定機*

8.MATERIAL OF PRODUCTS:生産に使用される原材料

MAIN MATERIALS used in production 主な生産材料:			Raw Materials
	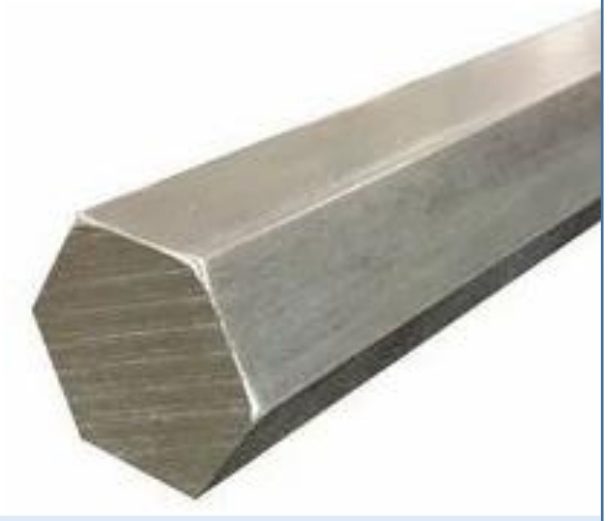	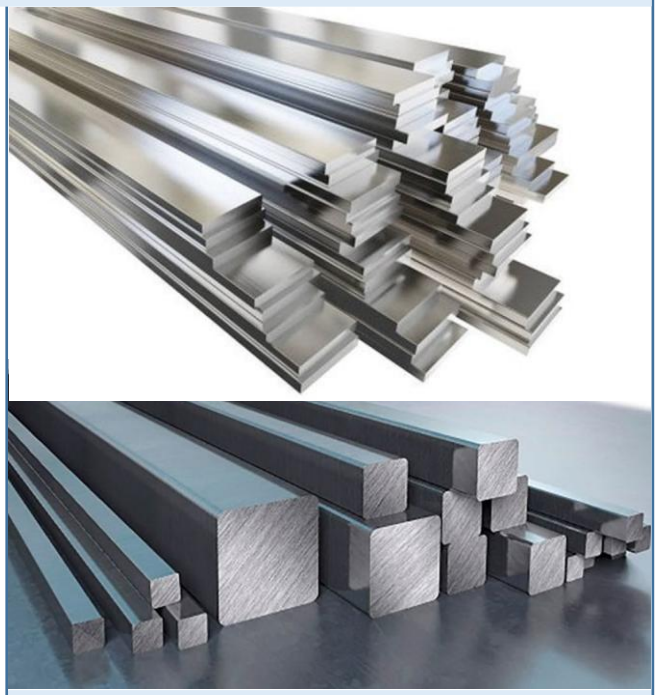	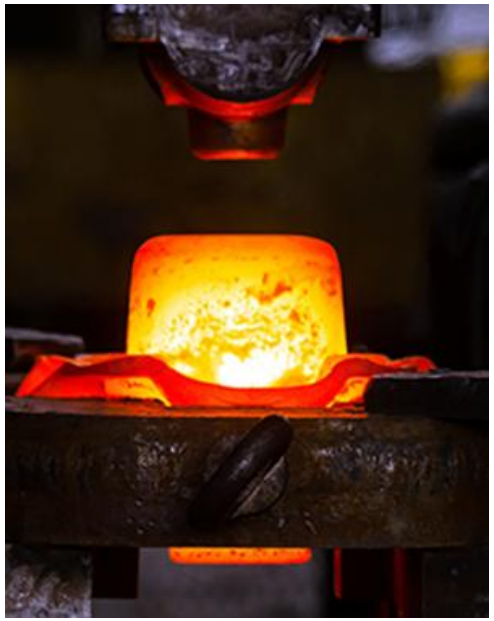
SUS303/304L/ 316L/ 410/ SCM440/ S45C Round Bar	SUS303/ 304L/ 316L/ 410 Hex Bar	SUS303/ 304L/ 316L/ 410/ S45C Flat Bar	Forging, Cutting before Processing (Outsourcing)

Other supplementary materials: 他の補足資料。

- *Copper (CU), Aluminum (AL), and Carbon Steel (SS400/S20C/S50C...) are also used, but not as extensively*

銅、アルミニウム、炭素鋼も使用されていますが、あまり多くはありません:



THANK YOU!

どうもありがとうございます

Vu Manh Giap (Mr.) ☎ (+84)2043.688.688 Ext 223 (+84)096.962.8884 ✉ giapvm@tci-precision.vn