VanLong

Company Profile

Value Added – Trust Earned

Agenda

A. GENERAL INTRODUCTION	
Vanlong Group Structure	3
Vision - Mission - Core Values	4
Vanlong Milestones	5
Business Scope	6
B. VANLONG CAPABILITIES	
Plastic Product Manufacturing	9
Mold Design & Manufacturing	11
R&D and Engineering	12
Quality Assurance System	13
C. REPRESENTATIVE PROJECTS	14
D. VANLONG CULTURE	20
E. TRUSTED PARTNER	21

A. General Introduction

VanLong Group

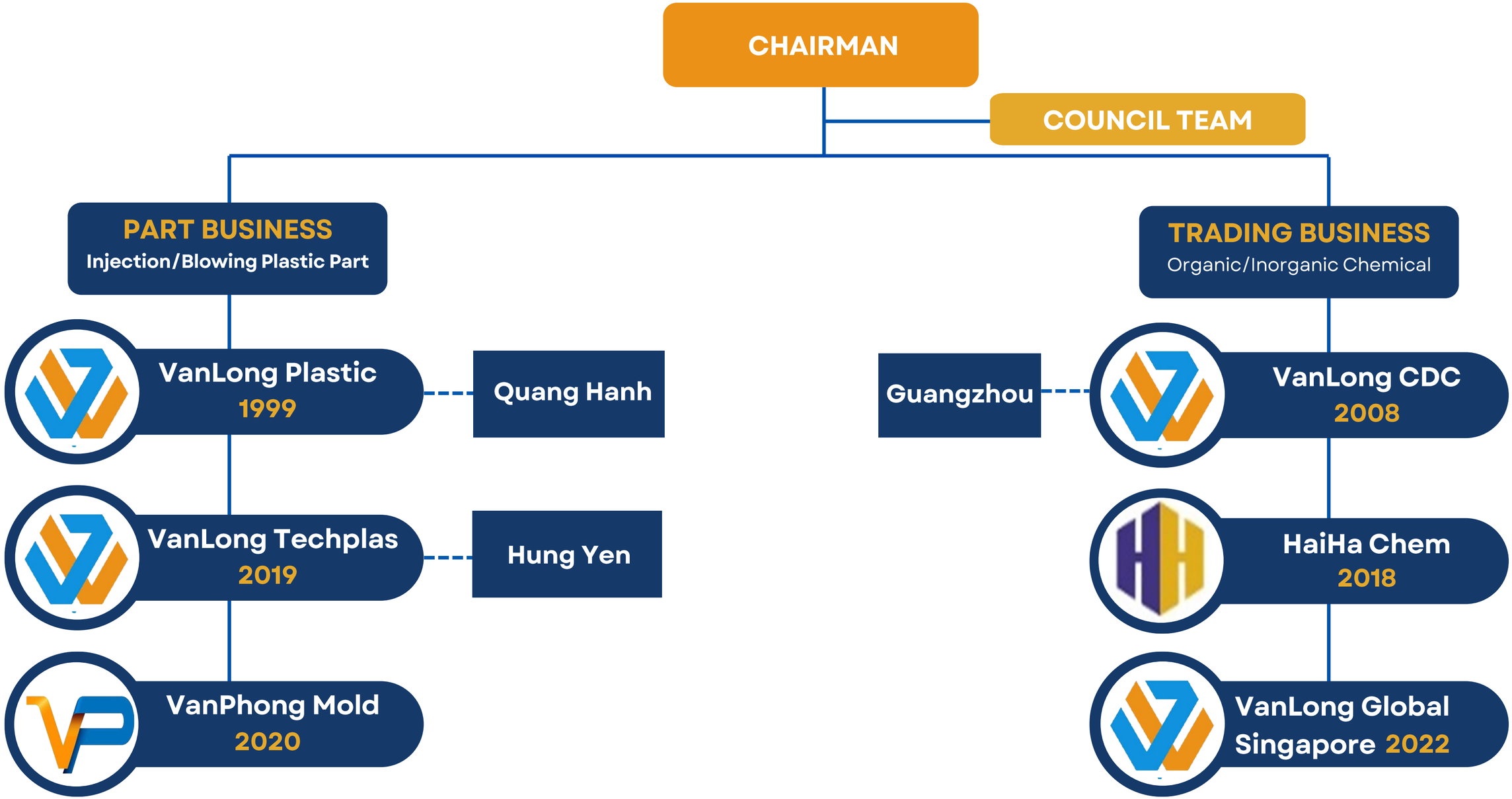

Business Philosophy

Embrace challenges to grow.

With a manufacturing strategy focused on high-quality components and integration into global supply chains, VanLongPlastic commits to facing difficulties head-on and steadfastly pursuing our chosen strategy - through discernment, perseverance, and determination - to overcome obstacles and develop.

VISION

A Strong and Professional Company in the Global Supply Chain

To build Van Long into a strong and professional enterprise within the global supply chain. We integrate various injection molding technologies and supporting processes to perfect products, serving OEM and ODM customers.

MISSION

Connecting Global Supply Chains

Van Long affirms its mission to operate within international supply chains by manufacturing high-quality components and integrating advanced technologies into its factories, thereby meeting the stringent requirements of customers.

CORE VALUES

Five core values

Customer Focus – Teamwork – Perseverance – Learning & Continuous Improvement – Efficiency

Our Milestones



1999

Van Long Company Limited was established



2002

Construction 1st factory, specializing in injection.



2012

Built 2nd factory specializing in blowing



2019

Van Long Technical Plastics JS Company was established



2020

Van Phong Precision Mold JS Company was established



2026

Setup new factory in Hung Yen

2027 Milestone



- Hung Yen Branch – Van Long Technical Plastic JSC
- Plot U2 – Thang Long Industrial Park II, Hung Yen
- 25,000 m²
- 25 MUSD
- 50 machines (2 stages)_(80T~1300T)
- 700 resin tons/month
- Injection - Mold making - Assembly - 2nd process technology

Our Business Scope

INJECTION

Capable of injecting a wide range of plastic products and components, with clamping forces ranging from 40 to 1,300 tons.

BLOWING

Specialized in blow molding of engine oil bottles (0.8–20L) and high-tech plastic parts for printers and refrigerators

MOULDING

Providing a full-service process from product design to mold making and part production.

SUB-ASSEMBLY

Offering assembly services for home appliance devices, electronic components, and industrial engineering applications.

AUXILIARY PROCESSING

Hot stamping, printing (silk screen & tampon printing), seal application, and automatic packaging, etc.



CERTIFICATION & COMPLIANCE STANDARDS

ISO 9001:2015



CERTIFICATE

dqs

This is to certify that

Van Long Technical Plastic Joint Stock Company

Lot P-3, Trang Due Industrial Park, An Hoa Commune, An Duong District,
Hai Phong City,
Vietnam.

has implemented and maintains a **Quality Management System**.

Scope:
Manufacture of Plastic Products

Through an audit, documented in a report, it was verified that the management system fulfills the requirements of the following standard:

ISO 9001 : 2015

Certificate registration no.	50650090 QM15
Valid from	2023-11-28
Valid until	2026-11-27
Date of certification	2023-11-28

DAkkS Deutsche Akkreditierungsstelle D-ZM-16074-01-00

DQS GmbH

DQS IS A MEMBER OF IQNET

Christian Gerling
Managing Director

Accredited Body: DQS GmbH, August-Schanz-Straße 21, 60433 Frankfurt am Main, Germany
Administrative Office: DQS Cert. Co. Ltd., Helios Tower- Tower B,
No.75 Tam Trinh Street, Mai Dong Ward, Hoang Mai District, Hanoi, Vietnam
The validity of this certificate can only be verified by the QR-code.

ISO 14001:2015



CERTIFICATE

dqs

This is to certify that

Van Long Technical Plastic Joint Stock Company

Lot P-3, Trang Due Industrial Park, An Hoa Commune, An Duong District,
Hai Phong City,
Vietnam.

has implemented and maintains an **Environmental Management System**.

Scope:
Manufacture of Plastic Products

Through an audit, documented in a report, it was verified that the management system fulfills the requirements of the following standard:

ISO 14001 : 2015

Certificate registration no.	50650090 UM15
Valid from	2023-11-28
Valid until	2026-11-27
Date of certification	2023-11-28

DAkkS Deutsche Akkreditierungsstelle D-ZM-16074-01-00

DQS GmbH

DQS IS A MEMBER OF IQNET

Christian Gerling
Managing Director

Accredited Body: DQS GmbH, August-Schanz-Straße 21, 60433 Frankfurt am Main, Germany
Administrative Office: DQS Cert. Co. Ltd., Helios Tower- Tower B,
No.75 Tam Trinh Street, Mai Dong Ward, Hoang Mai District, Hanoi, Vietnam
The validity of this certificate can only be verified by the QR-code.

IATF 16949



CERTIFICATE

dqs

This is to certify that

Van Long Technical Plastic Joint Stock Company

Lot P-3, Trang Due Industrial Park, An Hoa Ward, An Duong District
04414 Hai Phong City
Vietnam

IATF USI GS6TCW

has implemented and maintains a **Quality Management System**.

Scope:
Manufacture of Plastic Products For Car Speaker Assemblies

An audit, conducted and documented in a report, has verified that this quality management system fulfills the requirements of the following international automotive standard and IATF Rules 6th Edition:

IATF 16949:2016
(without product design)

Certificate registration no.	50650090 IATF25
Issuing date	2025-04-05
This certificate is valid until	2028-04-04
IATF No.	0570626

For and on behalf of DQS

Ingo M. Rübenach
Managing Director, DQS Holding GmbH

Nurani S. Venkatachalam
Director-Corporate Automotive Program, DQS Holding GmbH

IATF Contract Office: DQS Holding GmbH, Konrad-Adenauer-Allee 8-10, 61118 Bad Vilbel, Germany
The validity of the certification can only be verified by the QR-code.

2025-03-05

VanLong

B. VANLONG CAPABILITIES

- **25+** Year of experiences
- **1000+** Employees
- **38.000** m2
- **04** Factories
- **100+** Machines

B. VanLong Capabilities

PLASTIC PRODUCT MANUFACTURING

INJECTION

Type	Clamping Force	Q'ty	Brand
Horizontal Injection	80-1300	~100	**JSW (60%)**, Toshiba, Woojin, LS Mtron, Haitian
Vertical Injection	40-150	~5	**JSW (70%)**, Woojin
Next Investment	1300-2400		Based on customer demands





BLOWING

Type	Q'ty	Brand	Volume
Standard	~10	Akei	0.12-20L
In Mold Lable	2	Akei, Tahara	0.8-1.2L



B. VanLong Capabilities

PLASTIC PRODUCT MANUFACTURING

AUXILIARY PROCESSING

Type	Q'ty	Brand
Hot Stamping	12	China
Printing (Silk, Tampo)	7	China
Welding	3	Vietnam
Packing	4	China

SUB-ASSEMBLY

Lines	Q'ty
Injection	8 lines
Blowing	3 lines



Hot stamping



Heat Transfer





Silk printing

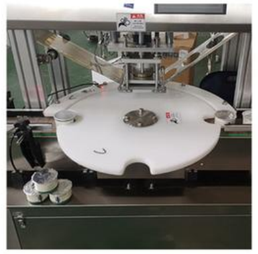

Seal attaching





Tampon printing



Ultrasonic welding



Mold design & Manufacturing Capabilities

MANUFACTURING NEW MOLDS

Our mold-making capability covers **50T–850T** injection molds, from design and machining to assembly and trial, meeting strict technical and quality requirements.

MOLD MAINTENANCE AND REPAIR

Mold maintenance and repair services to maintain precision, durability, and stable mass production.

Business Line

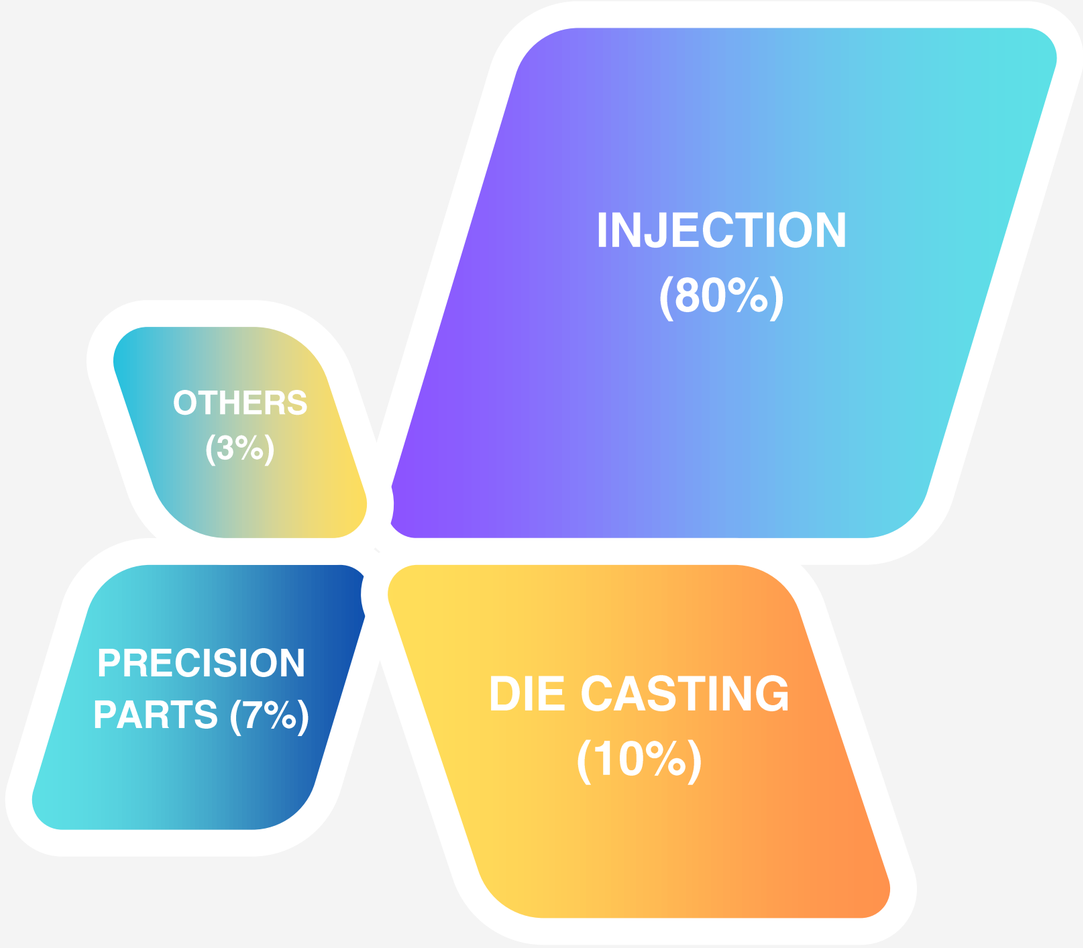

B. VanLong Capabilities

MOLD DESIGN & MANUFACTURING

Type	Q'ty	Brand
CNC	5	Makino/Hwacheon
EDM	5	Sodick/Makino
WEDM	2	Sodick/Makino
Grinding	3	Nicco/Kuroda
Lathes	1	Howa
Milling	2	Okuma & Howa
Sawing	2	Amada
Drilling	1	Yoshida



R&D
AND ENGINEERING CAPABILITIES

VAN LONG has a highly experienced R&D team with deep expertise in plastics materials, mold technology, and international technical standards.
We continuously invest in advanced CAD/CAM/CAE design systems, high-precision CNC machinery, and modern simulation software. These resources allow us to shorten mold design cycles, optimize production efficiency, and maximize performance.

- **Design Engineer.....8**
- **CAM Engineer.....4**
- **R&D Experts.....20**



Quality Assurance

Type	Q'ty	Brand
3D Measuring Machine	3	Mitutoyo/Hexagon
2D Measuring Machine	2	Mitutoyo/Hexagon
Surface Roughness Tester	2	Mitutoyo
Hardness Tester	2	BYK-Gardner
Insulation Resistance Tester	2	Simco
Tensile & Compression Testing Machine	1	Lỹyan
Electrical Safety Analyzer	1	Kikusui
Color Measuring Instrument (CR-400)	1	Konica minolta



C. REPRESENTATIVE PROJECTS



WASHING MACHINE

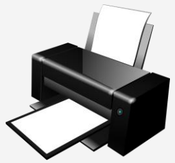

PRINTER



VACUUM CLEANER



TELEVISION



REFRIGERATOR



E-MOTORCYCLE



BLOWING PARTS



AUTOMOTIVE

C. REPRESENTATIVE PROJECTS

WASHING MACHINE



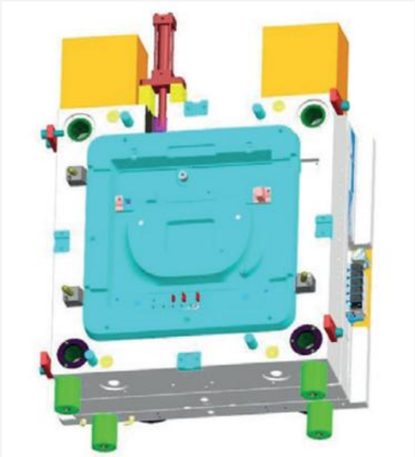



PCB Cover Protection

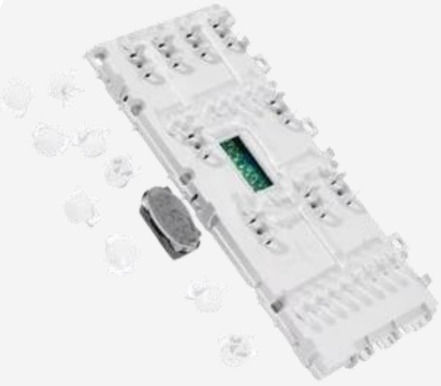

Led Supporter



Coating Guide

C. REPRESENTATIVE PROJECTS

VACUUM CLEANER





VC Cover



Base Body



Dust Container



Nozzle

C. REPRESENTATIVE PROJECTS

VACUUM CLEANER



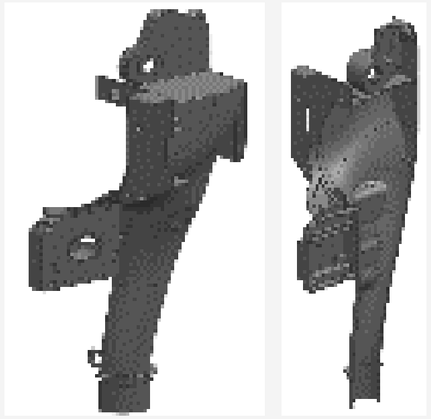

Air Guide

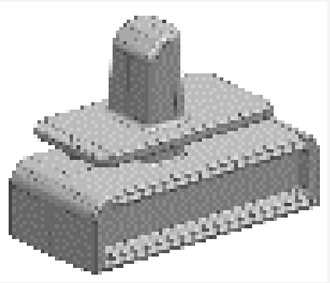

Lever

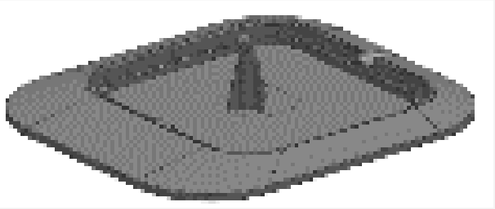

Bottom Plate

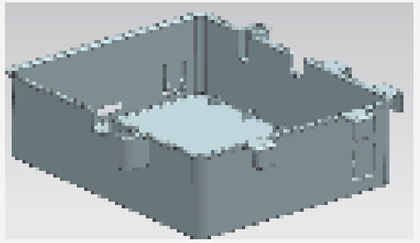

Supporter Case

C. REPRESENTATIVE PROJECTS

REFRIGERATOR



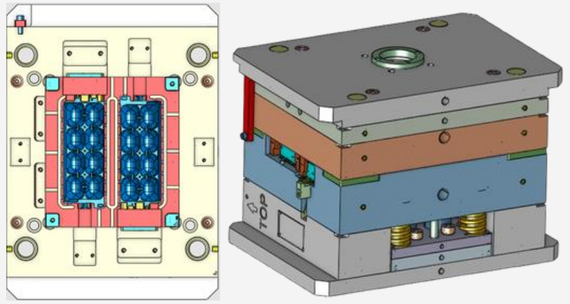



Fridge Tray



Water Container



Fridge Fan

C. REPRESENTATIVE PROJECTS

BLOWING PARTS



Engine Bottle



Engine Bottle



Engine Bottle



Engine Container



Drain Tube



Ink Waste Bottle

C. REPRESENTATIVE PROJECTS

PRINTER





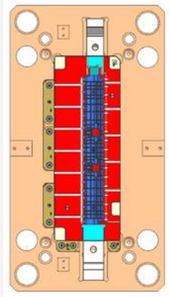

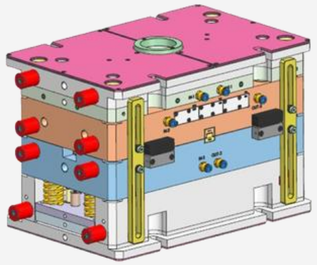

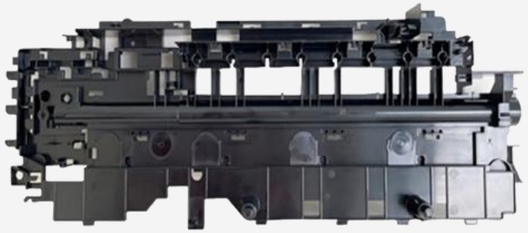

Waste Case



Cover Top

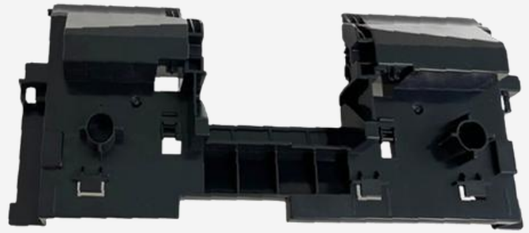

Guide Feed

C. REPRESENTATIVE PROJECTS

TELEVISION



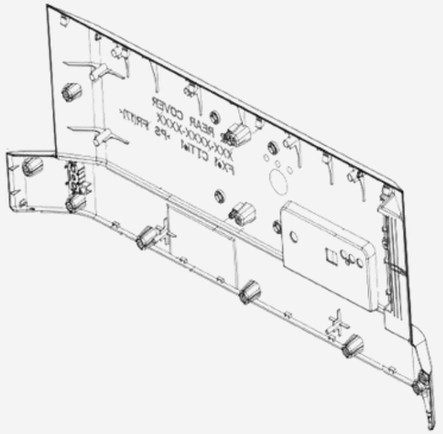

Rear Cover



Top IO

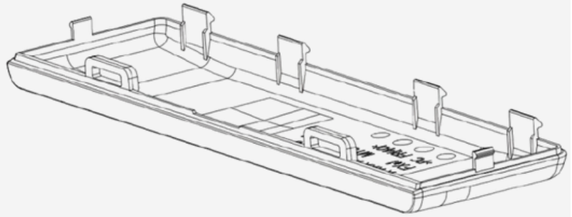

Ornamental Panel



Dummy Card

C. REPRESENTATIVE PROJECTS

E-MOTORCYCLE



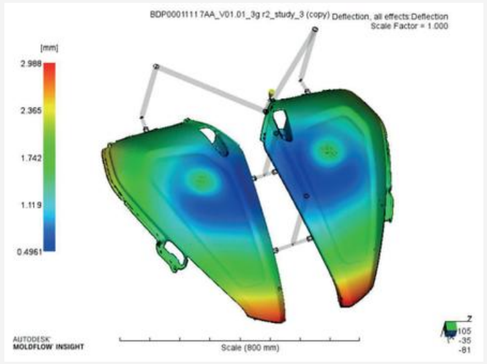



Rear of E-motos



Front Mudguard



Compartment

C. REPRESENTATIVE PROJECTS

AUTOMOTIVE







Speaker Cover



Speaker Cover



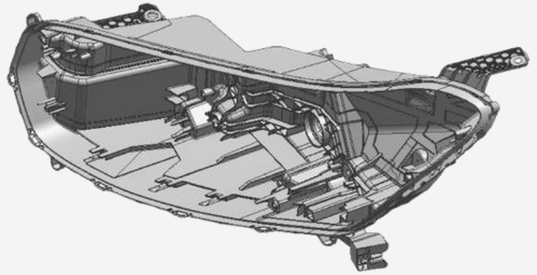

Headlight Cluster

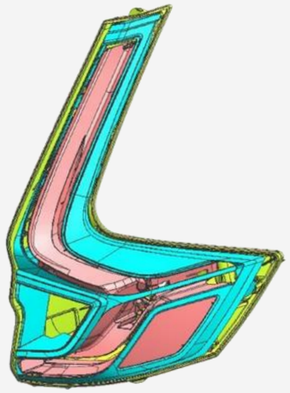

Rear light Cluster

D. VanLong Culture

Beyond manufacturing and business operations, VAN LONG fosters a cohesive, dynamic, and creative corporate culture through regular employee activities. These initiatives strengthen teamwork, inspire passion, and build a united workforce that delivers sustainable value to customers and partners.





E. VANLONG TRUSTED PARTNERS



Why Choose VanLong

- Outstanding Manufacturing Capacity
- Flexible Solutions, Cost Optimization
- Dedicated Technical Experts
- Commitment to Absolute Timeliness & Confidentiality
- Long-Term Partnership, Sustainable Growth

Connect with us.

Email

Vanlong02@vanlongtechplas.com.vn

Call us

(+84) 225.3798.886